GENERATOR

GEN-32P-US-V2

OPERATOR'S MANUAL

Rev 0625

CONTENTS

INTRODUCTION 1
DISCLAIMER 1
ABOUT THIS MANUAL 2
KEY TERMS 2
SAFETY INFORMATION 3
GENERATOR POSITIONING FOR SAFE USE 5
ELECTRICITY RELATED SAFETY PRECAUTIONS 5
FIRE -RELATED SAFETY PRECAUTIONS 6
EARTHING OF GENERATOR 6
SAFETY DECALS 8
GENERAL SAFETY DECAL 8
PRODUCT SPECIFICATION 9
RECEPTACLE FUNCTION TREE 9
OVERALL MACHINE DIMENSION 10
ALTERNATIOR SPECIFICATION 11
CONTROLS AND FEATURES 13
INSTRUCTIONS FOR USE 14
BEFORE USE 14
OIL LEVEL CHECK 14
REFUELING 15
OPERATING GENERATOR 16
STARTING THE GENERATOR 16
PARALLEL MODE - CONNECT 17
PARALLEL MODE – DISCONNECT 17
CONNECTING ELECTRICAL DEVICES 17
SHUTTING DOWN THE GENERATOR 17
MAINTENANCE 18
GENERAL RECOMMENDATIONS 18
GENERAL GENERATOR CHECKS 18
GENERAL TROUBLESHOOTING 19
ENGINE FREQUENCY ADJUSTMENT 20

STORAGE WITH FUEL IN TANK 22
RUST PREVENTION IN CYLINDERS 22
BATTERY STORAGE PRECAUTIONS 22
LIMITED WARRANTY 23
WARRANTY EXCLUSIONS 23
NORMAL WEAR 23
INSTALLATION, USE, AND MAINTENANCE 23
OTHER EXCLUSIONS 24
OWNER'S RESPONSIBILITY UNDER THIS LIMITED WARRANTY 24
CLAIM PROCEDURE: 25
CONTACT INFORMATION 26
APPENDIX A – RISK ASSESSMENT 27

INTRODUCTION

Thank you for purchasing a MAKINEX product.

This manual provides information and procedures to safely operate and maintain the GEN-32P Generator. For your own safety and protection from injury, carefully read, understand and observe the safety instructions described in this manual.

Keep this manual or a copy of it with the machine. If you lose this manual or need an additional copy, please contact MAKINEX. This machine is designed and built with user safety in mind; however, it can present hazards if improperly operated and serviced. Please follow the operating instructions carefully. If there are any questions regarding operating or servicing of this machine, please contact MAKINEX.

The information contained in this manual was based on machines in production at the time of publication. MAKINEX reserves the right to change any portion of this information without notice.
All rights, especially copying and distribution rights are reserved.
Copyright 2025 by MAKINEX.

No part of this publication may be reproduced in any form or by any means, electronic or mechanical, including photocopying, without express written permission from MAKINEX.
Any type of reproduction or distribution not authorised MAKINEX represents an infringement of valid copyrights and will be persecuted. We expressly reserve the right to make technical modifications, even without due notice, which aim at improving our machines or their safety standards.

DISCLAIMER

MAKINEX and its affiliates take no responsibility for any damage, injury or death resulting from the incorrect or unsafe use of this product. Use of this product should be undertaken by competent persons only. It is the operator's responsibility to ensure that the following safety procedures are followed. If you are unsure, do not operate this product.

Record the model and serial numbers as well as date and place of purchase for future reference. Have this information available when ordering parts and when making technical or warranty enquiries.

MAKINEX SUPPORT
Refer to contact details on page 26
MODEL NO.
GEN-32P-US-V2
SERIAL NO.
DATE OF PURCHASE
PURCHASE LOCATION

ABOUT THIS MANUAL

This manual uses the following symbols to help differentiate between different kinds of information. The safety symbol is used with a key word to alert you to potential hazards in operating and owning power equipment. Follow all safety messages to avoid or reduce the risk of serious injury or death.

KEY TERMS

READ CAREFULLY	READ CAREFULLY – refers to **important information** that should be paid careful attention.
CAUTION	CAUTION - indicates a situation that **may** cause injury or damage to the machine if the user does not follow the instructions.
WARNING	WARNING – indicates a situation that **may** cause injury or death if the user does not follow the instructions correctly.
DANGER	DANGER – indicates a situation that **will** cause injury or death if the user does not follow the instructions as written.
PROHIBITED	PROHIBITED – identifies actions that **should never** be carried out by anyone interacting with the equipment.

These safety warnings do not eliminate all possible hazards that could occur therefore it is essential to use common sense and to strictly follow any instructions to prevent accidents.

SAFETY INFORMATION

Throughout this document there are several safety warnings. The user should read through this complete document before using the **GEN-32P-US-V2**.

WARNING	Read this manual **thoroughly** before operating your pressure cleaner. Failure to follow instructions could result in serious injury or death

DANGER	MAKINEX GEN-32P Generator designed for professional operators only, instruct operators in care and use of the machine before use! Keep children away from the generator at all times.

DANGER	Always wear the recommended personal protective equipment (PPE).

- **ALWAYS** use in a well-ventilated area
- **ALWAYS** have someone alert attending the machine
- **ALWAYS** wear hearing protective equipment whilst in operation
- **ALWAYS** ensure the applied load does not exceed the generators rating
- **ALWAYS** disconnect the generator when carrying out any maintenance
- **ALWAYS** ensure the generator reaches operating speed before connecting a load
- **ALWAYS** start the engine **BEFORE** connecting any appliances to the output receptacles
- **ALWAYS** test the RCBO's before use
- **ALWAYS** check the generator for damage before use
- **ALWAYS** keep well clear of all moving parts on the generator
- **NEVER** allow children or animals near the generator
- **NEVER** connect to a commercial or mains power supply, or any other electrical source
- **NEVER** allow the generator to run out of fuel when a load is connected
- **NEVER** use accessories or attachments not recommended by MAKINEX
- **NEVER** alter or tamper with the internal wiring of the generator
- **NEVER** operate in wet conditions

- **NEVER** climb or stand on the generator as dents may cause overheating of the acoustic lining

DANGER

RISK OF HOT SURFACES

- Contact with hot surfaces, such as engine's exhaust components, could result in serious burns.
- During operation, touch only the control surfaces of generator.

- **NEVER** touch any part of the engine, alternator, or exhaust when the generator is in use or immediately after use, as these get hot and could burn

DANGER

RISK OF BREATHING

- Running engine gives off Carbon Monoxide, an odourless, colourless, poisonous gas.
- Breathing Carbon Monoxide can cause nausea, fainting or death.
- Some chemicals or detergents may be harmful if inhaled or ingested, causing severe nausea, fainting or poisoning.

DANGER

EXHAUST FUMES CAN BE FATAL

TOXIC HAZARD

- **AWAYS** ensure that there is adequate ventilation when using the generator.
- **ALWAYS** position the generator so that the exhaust is pointing away from people or animals
- **NEVER** use the generator indoors or in an enclosed area

WARNING

RISK OF FALL HAZARD

- Use of pressure cleaner can create puddles and slippery surfaces.
- Kick back from spray gun can cause you to fall.

- Keep operating area clear of all persons, pets and obstacles.

GENERATOR POSITIONING FOR SAFE USE

- **ALWAYS** leave at least a 1 metre (3 foot) gap between the generator and any surrounding building or structure.
- **ALWAYS** ensure the generator is on a solid, flat surface.
- **ALWAYS** ensure the surrounding area is free from any material that could burn or be damaged by heat.
- **NEVER** move or tilt the generator whilst it is switched on.
- **NEVER** cover or enclose the generator whilst it is in use.
- **NEVER** use the generator at an incline above 20° otherwise the engine will malfunction whilst in operation.
- **NEVER** attempt to lift or move the generator without the assistance of other persons or suitable lifting equipment.

ELECTRICITY RELATED SAFETY PRECAUTIONS

WARNING	**RISK OF ELECTRICAL SHOCK** • Risk of electrocution	**ELECTRICAL HAZARD**

- **ALWAYS** store the generator undercover when not in use and away from damp or wet conditions.
- **ALWAYS** disengage the battery when performing any maintenance.
- **NEVER** try to repair electrical components if not authorised or qualified.
- **NEVER** use the generator outdoor when it is raining or snowing or in wet or damp conditions.
- **NEVER** use water or any other liquids to clean the unit while it is running.
- **NEVER** use any damaged electrical cord sets with the generator.

FIRE -RELATED SAFETY PRECAUTIONS

RISK OF EXPLOSION OR FIRE

- Fuel and its vapours are extremely flammable and explosive
- Fire or explosion can cause severe burns or death

DANGER

FIRE HAZARD

- **ALWAYS** switch the engine **OFF** when refuelling.
- **ALWAYS** refuel away from any source of heat.
- **ALWAYS** refuel in a well-ventilated area.
- **ALWAYS** keep a fire extinguisher in the vicinity at all time
- **NEVER** overfill fill the tank, fill to the level specified to allow for fuel expansion.
- **NEVER** smoke or use a naked flame near the generator.
- **NEVER** start the engine if there is a fuel spill. Any spillage must be wiped clean and the generator allowed to dry before attempting to start the engine.
- **NEVER** leave any combustible materials near the generator.

EARTHING OF GENERATOR

Earthing of generators helps protect the user from electric shock or electrocution which may be caused due to malfunction or breakdown. This threat to the user is prevented by creating a path of least resistance for the electrical current to travel to the ground which inherently absorbs the over-current or short circuit.

The appropriate measures for earthing the portable generator are already in place however, the user should always inspect the earthing system before use.

WARNING

DO NOT TOUCH ANY COMPONENTS IF YOU ARE NOT A QUALIFIED ELECTRICIAN.

ELECTRICAL HAZARD

WARNING

FAILURE TO PROPERLY CONNECT THE EQUIPMENT TO THE EARTHING CONDUCTOR WILL RESULT IN A RISK OF ELECTROCUTION. CONSULT WITH A QUALIFIED ELECTRICIAN INCASE OF DOUBT WITH THE EARTHING OF THE UNIT.

Referring to the example image, there are a few components that should be observed.

- Frame
- Green/yellow earth wire
- Screw

Ensure wires for both engines are secured with the screws onto the frame.

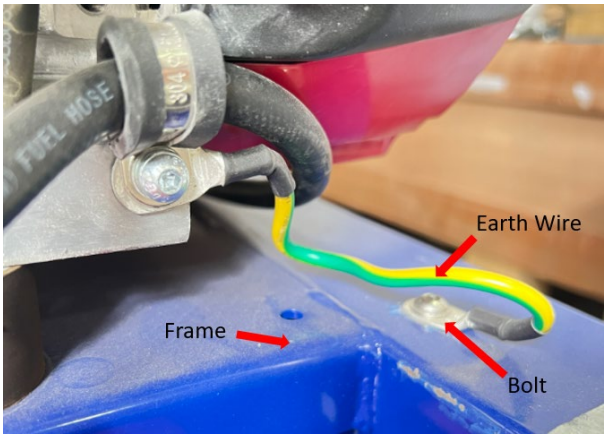

READ CAREFULLY	**ANY OTHER GROUNDING INSTALLATION MUST BE CARRIED OUT BY A LICENSED ELECTRICIAN AND ALL LOCAL CODES MUST BE FOLLOWED.**

We strongly recommend that all applicable federal, state, and local regulations relating to grounding/earthing specifications be checked and followed.

SAFETY DECALS

There is a safety and information panel provided on the Parallel box (see images below) of the **GEN-32P-US-V2** to alert the user of potential safety risks/hazards. Please read and adhere to all instructions on the Unit.

PROHIBITED	It is forbidden to remove any safety or instructional stickers or panels from the **GEN-32P-US-V2**.

READ CARE-FULLY	Read all safety and instructional stickers displayed on each component of the **GEN-32P-US-V2.**

GENERAL SAFETY DECAL

DECALS NOT TO SCALE

GEN-32P-US-V2

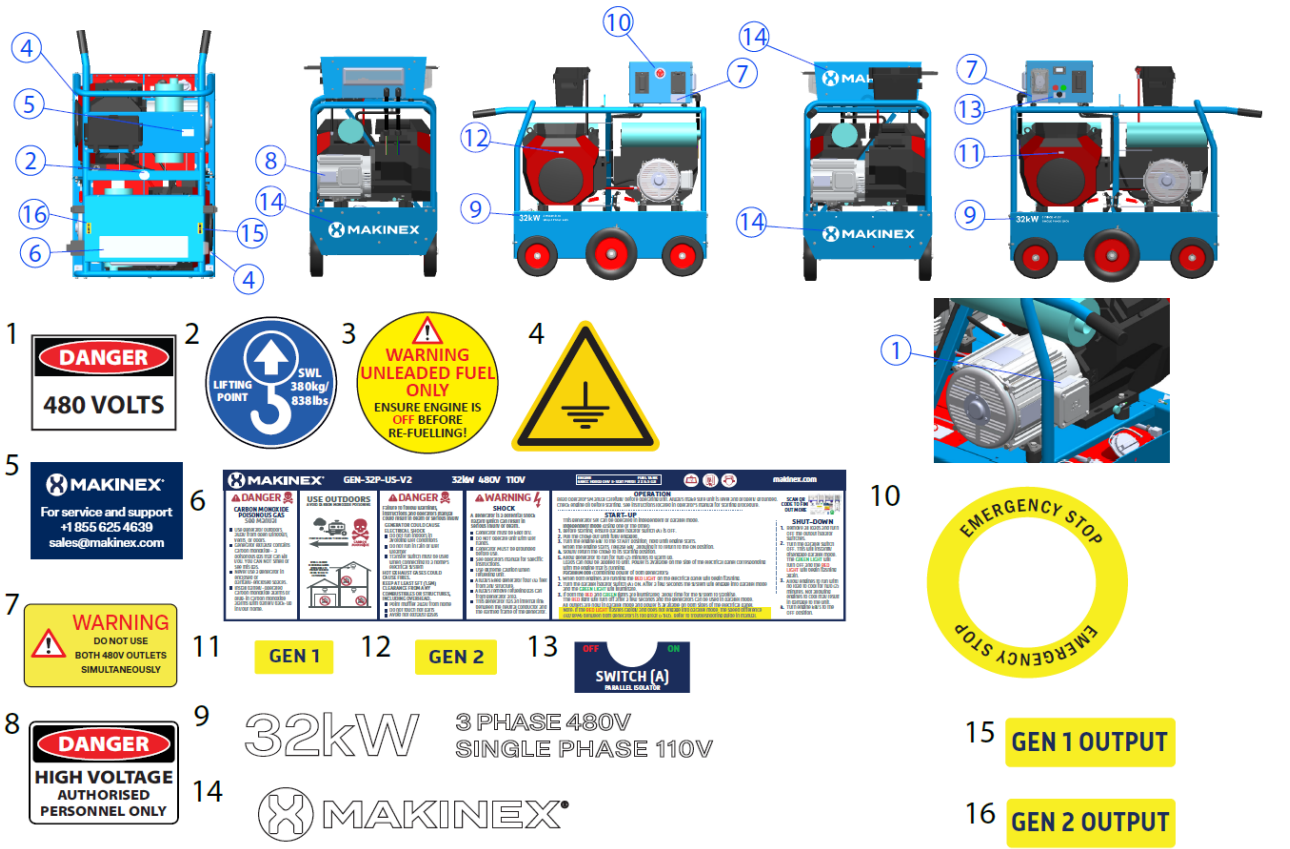

PRODUCT SPECIFICATION

SPECIFICATION	VALUE
VOLTAGE	110V single phase, 480V three phase
FREQUENCY	60HZ
3Ø THREE PHASE POWER (PARALLELED)	Max: 28 kW / Continuous: 25.2 kW†
3Ø THREE PHASE POWER (UNPARALLELED)	Max: 13 kW / continuous: 11.5 kW†
1Ø SINGLE PHASE POWER (AUX)	Max: 2.2 kW / Continuous: 2 kW††
3Ø THREE PHASE MAX AMPS (PARALLELED)	Max: 33.8 A / Continuous: 30.55 kW†
3Ø THREE PHASE MAX AMPS (UNPARALLELED)	Max: 16.9 A / continuous: 15A†
1Ø SINGLE PHASE MAX AMPS (AUX)	Max: 20A / Continuous: 18A††
DRY WEIGHT	772 lbs
NOISE LEVEL (7M)	72–76 dB
ENGINE TYPE	Twin cylinder air cooled petrol
ENGINE MODEL	Honda GX690 x 2
STARTING SYSTEM	Electric key start
DISPLACEMENT	1376 CC
FUEL ECONOMY	2.6 gal @ 50% LOAD
FUEL TANK	13.2 G
DIMENSIONS	43 in (L) x 24.8 in (W) x 40.3 in (H)

† Maximum cumulative power and current across provided receptacles.

RECEPTACLE FUNCTION TREE

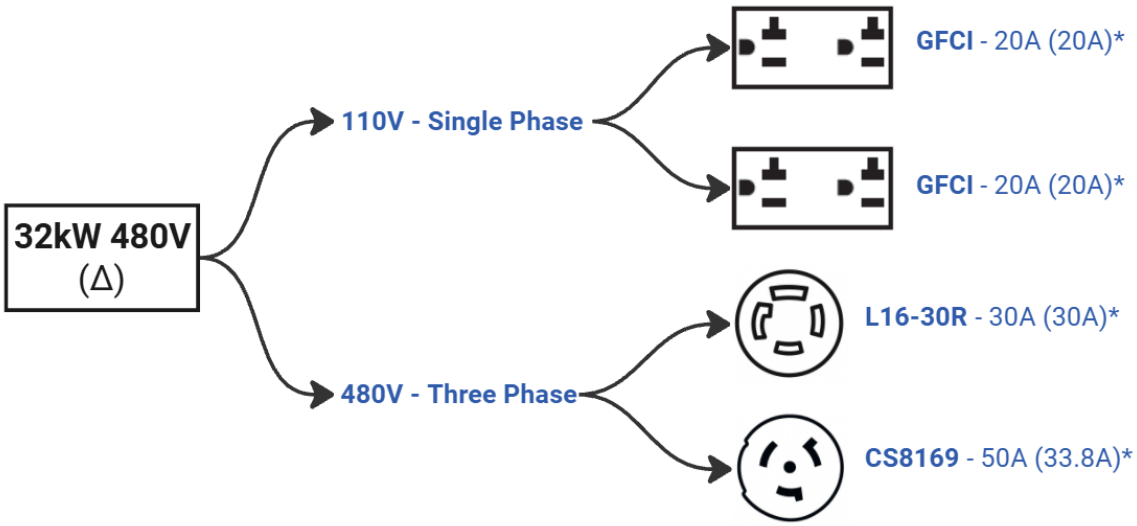

*Receptacle Rating (Receptacle Maximum Rating)

DO NOT USE BOTH 480V – THREE PHASE RECEPTACLES SIMULTANEOUSLY

OVERALL MACHINE DIMENSION

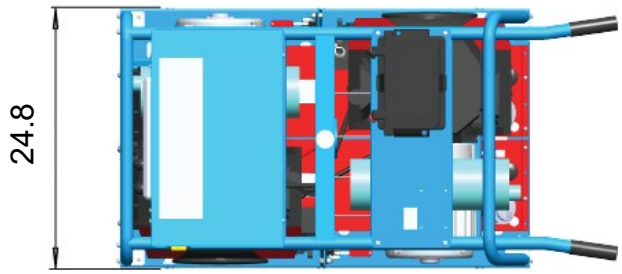

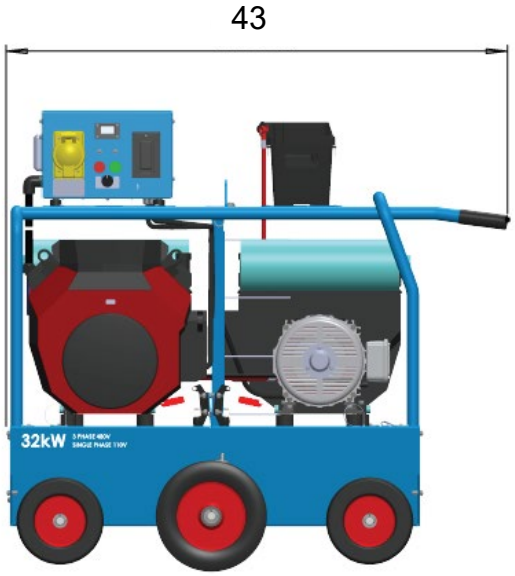

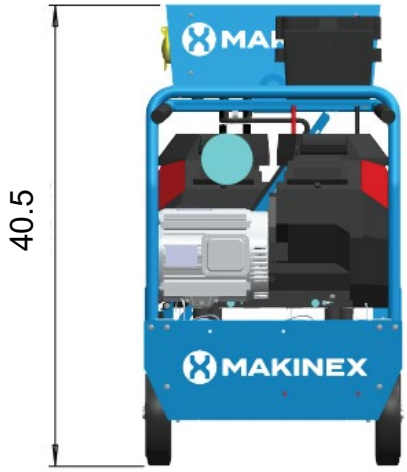

*Dimensions in inches

ALTERNATIOR SPECIFICATION

RFL ALTERNATORS

RFL Alternators

http://www.rflalternators.com

Frame	132	Type	RF2 - 17.5 - 6 - 32
Enclosure	IP23		PM Brushless Alternator
Poles	2	Phase	3 Δ
RPM	3600	Volts	240/480 & 110 (Aux)
Frequency	60 Hz	Amps	16.9 & 20 (Aux)
Power(kW)	13 & 2.2 (Aux)	Motor Start kVA	40.0
Weight (kg	51	Short Cir Amps	90
Ref Temp	27 ºC	Serial No.	

CE

EC. 1282. 0P190523. RFLDQ73

ELECTRICAL PANEL SPECIFICATION

A – Circuit Breaker Enclosure (Circuit Breakers 1 – 5)

B – L16-30R**3Φ 480V 30A (30A†)** – CB2 / CB5

C – GFCI - **1Φ 110V 20A (20A†)** – CB1

D – CS8169 - **3Φ 480V 50A (33.8A†)** – CB2

E – GFCI - **1Φ 110V 20A (20A†)** – CB3

F – Emergency Stop

G – Voltage/ Frequency Monitor

H – Parallel Isolator

I – Green / Red LED Parallel Indicators

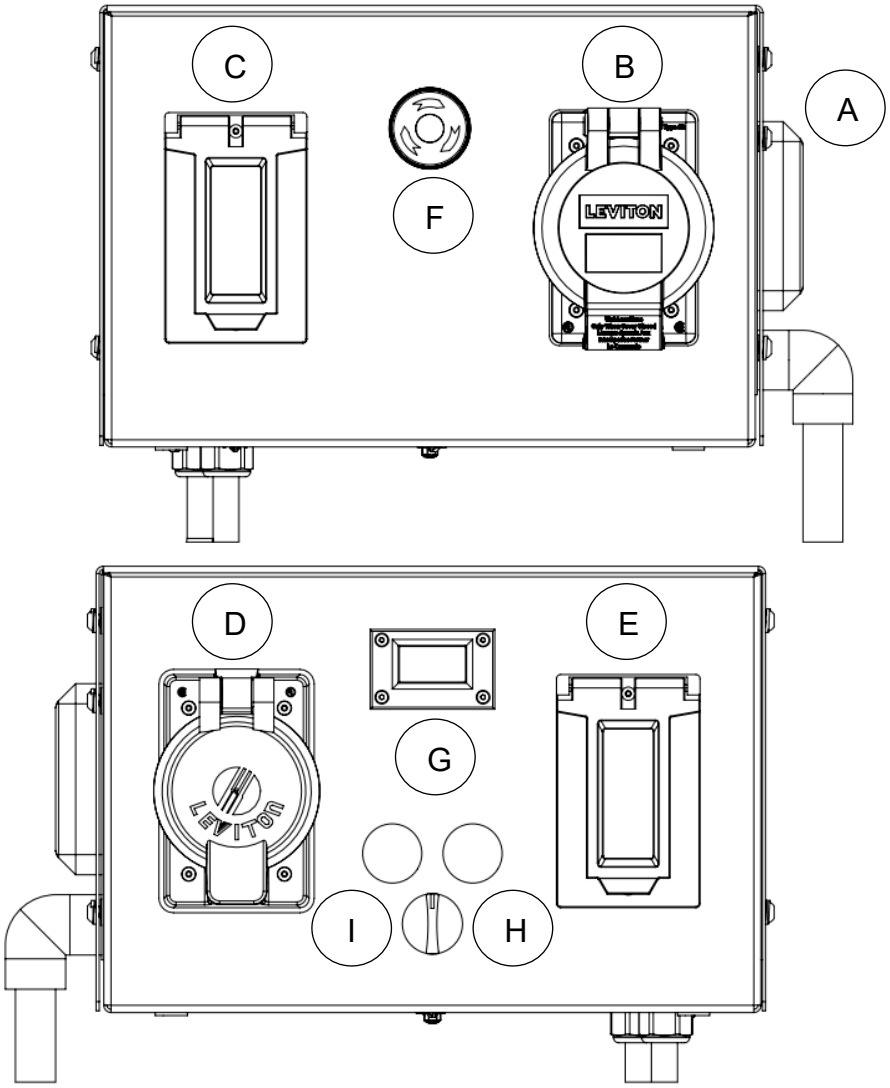

† Cumulative Max Output 3Φ 480V 16.9A (NOT PARALLELED) / 3Φ 480V 33.8A (PARALLED) / 1Φ 110V 20A

CONTROLS AND FEATURES

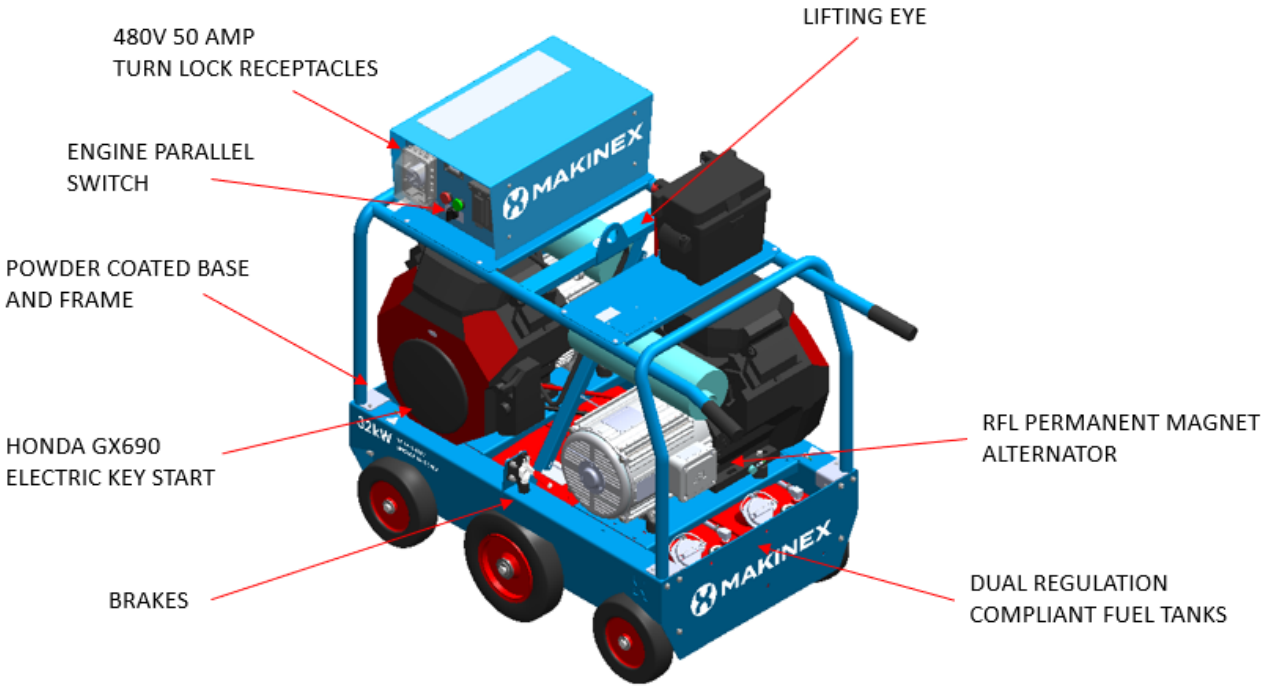

Durable Frame
Multi Cushion Isolators for Vibration Reduction
Compact Design for Easy Storage and Transport
Lifting Point for Transportation
RFL Permanent Magnet Alternator
HONDA Electric Key Start Motor
Engine Syncing Switch
Dual Regulation Compliant Fuel Tank
6 Wheel Design for Easy Manoeuvrability

WARNING	**NEVER** operate the **GEN-32P-US-V2** without wearing the appropriate personal protective equipment (PPE) including appropriate footwear. Assess the surrounding area for hazards.

WARNING	**ALWAYS** seek appropriate First Aid if Injury, Poisoning or Irritation occurs due to contact with Materials and Substances.

WARNING	**ALWAYS** read and adhere to all safety and operation instructions.

BEFORE USE

Before using the generator, ensure all the safety and operation instructions are read and the following steps are performed.

OIL LEVEL CHECK

CAUTION	Check the engine oil level with the engine stopped and in a levelled position

1. Check the engine oil level with the engine stopped and, in a levelled position.
2. Start the engine and let it idle for 1 or 2 minutes. Stop the engine and wait for 2 or 3 minutes.
3. Remove the oil level dipstick and wipe it clean.
4. Fully insert the oil level dipstick, then remove it to check the oil level.
5. If the oil level is low, remove the oil filler cap, and fill with the recommended oil to the upper limit mark on the oil level dipstick.
6. Reinstall the oil level dipstick and oil filler cap.

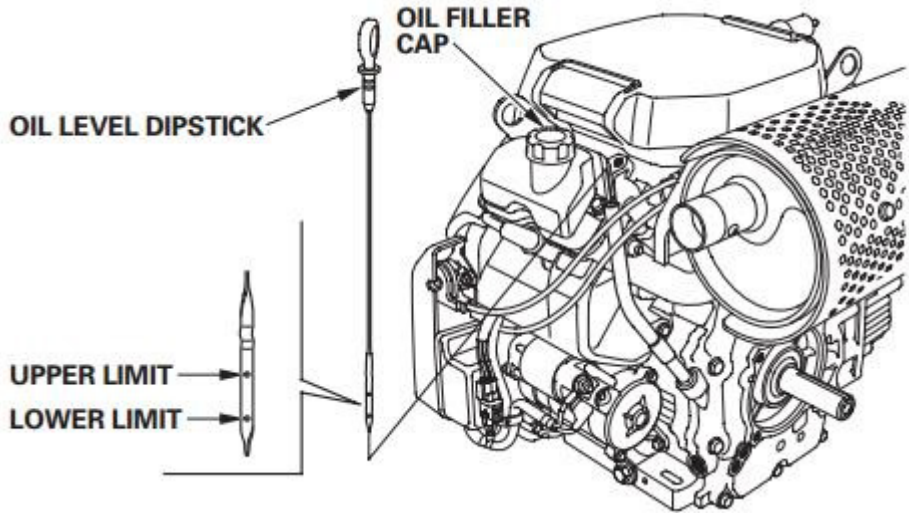

NOTE: New machines will be pre-oiled from MAKINEX with:
Honda Power Equipment Engine Oil – SAE 10W-30, API SJ

REFUELING

WARNING

FAILURE TO USE FUEL AS RECOMMENDED IN THIS MANUAL WILL VOID WARRANTY

- **DO NOT** use unapproved gasoline such as ethanol-based fuel.
- **DO NOT** mix oil with gasoline.
- **DO NOT** modify engine to run on alternate fuels.

WARNING

Fuel and fuel vapour are extremely flammable and explosive. Fire or explosion from misuse of fuel can cause severe burns and even death.

FIRE HAZARD

WARNING

Always ensure that fuel tanks are filled outdoors.

1. Turn generator **OFF** and let it cool for at least two minutes before removing fuel cap.
2. Loosen fuel cap slowly to release pressure.
3. Slowly add unleaded gasoline to fuel tank. **DO NOT** fill fuel above baffle to allow for appropriate space fuel expansion.
4. Repeat step 2 and 3 for second fuel tank.
5. Wait for spilled fuel to evaporate before starting the engine.

WARNING	**Keep fuel away from sparks, open flames, pilot lights, heat and other ignition sources.** **DO NOT light a cigarette or smoke near open fuel tank or container.**	

OPERATING GENERATOR

WARNING	**Read and adhere to all safety and operation instructions.**

WARNING	**Always have the brake down while it is stationary.**

STARTING THE GENERATOR

1. Remove all connections from the AC receptacles.
2. If the fuel tank is equipped with a valve, be sure the fuel valve is in the OPEN or ON position before attempting to start the engine.
3. To start a cold engine, pull the choke knob out to the CLOSED position. To restart a warm engine, leave the choke knob in the OPEN position.
4. Turn the engine switch to the START position and hold it there until the engine starts.
5. When the engine starts, release the engine switch, allowing it to return to the ON position.
6. Once the engine has warmed up, set the choke lever to the OPEN position.

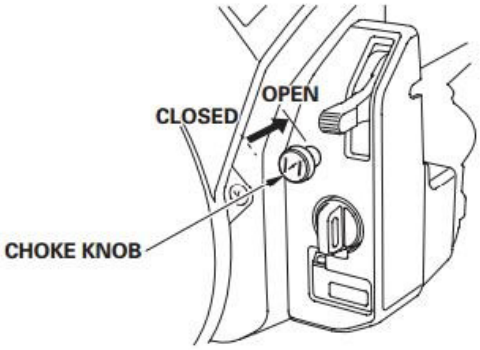

PARALLEL MODE - CONNECT

This generator set can be operated in independent or parallel mode.

Follow the instructions above to start GEN 1 **OR** GEN 2 for independent mode. This will power the receptacles on the side of the electrical panel corresponding to the engine that is running. The power output will be 16kW.

For parallel mode (combining power of both generators):

1. When both engines are running the RED LIGHT on the electrical panel will begin flashing.
2. Make sure that there are no loads connected, the generator cannot switch on-load.
3. Turn the parallel isolator switch (A) ON. After a few seconds the system will engage into parallel mode and the GREEN LIGHT will illuminate.
4. If both the RED and GREEN lights are illuminated, allow time for the system to stabilise. The RED light will turn off after a few seconds, and the generators can be used in parallel mode.
5. All receptacles are now in parallel mode running at the maximum available output.

PARALLEL MODE – DISCONNECT

1. When both engines are running in parallel the GREEN LIGHT on the electrical panel will begin solid.
2. Make sure that there are no loads connected, the generator cannot switch on-load.
3. Turn the parallel isolator switch (A) OFF. After a few seconds the system will disengage into independent mode and the RED LIGHT will begin to flash.
4. The generators are now in unparalleled and can be used independently or turned off safely

CONNECTING ELECTRICAL DEVICES

The generator can supply 110V AC through 2 x GFCI receptacles and 480V AC through the 1 x L16-30R and 1 x CS8169 receptacle.

1. Connect the appliance to the generator starting with the device that draws the most current.
2. Set the circuit breaker to 'ON'.

SHUTTING DOWN THE GENERATOR

1. Disconnect all appliances connected to the generator.
2. Unparallel generators if paralleled, using steps above.
3. Turn the ignition key to the OFF position for each generator.
4. Set the fuel supply valve to OFF if the fuel tank equipped with.

NOTE: To stop the generator in an emergency, press the **EMERGENCY STOP** button

GENERAL RECOMMENDATIONS

Regular maintenance will improve the performance and extend the life of the generator.

The generator's warranty does not cover items that have been subjected to operator abuse or negligence. To receive full value from the warranty, the operator must maintain the generator as instructed in this manual and in the **Honda GX690** user manual, including proper storage and regular servicing.

READ CAREFULLY	**Regular maintenance is required to ensure performance of generator and to ensure warranty is not voided.** **The maintenance schedule is in the Honda GX690 owner's manual.**

Should you have questions about replacing components on your generator, please contact dealer for assistance. MAKINEX dealers have access to all the special tools, technical information, parts and training required to maintain your MAKINEX product in peak operating condition.

GENERAL GENERATOR CHECKS

It is considered good practise to check the generator before and after use, looking at:

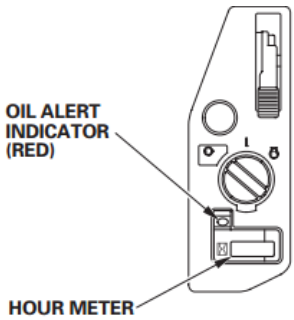

- Function of brake
- Condition of electrical components
- Earthing bolts are tight
- Condition of engine mounts
- Fuel lines conditions
- Oil and fuel levels
- Battery is well secured, and terminals are fastened tightly
- Hour meter
- Any possible leaks

GENERAL TROUBLESHOOTING

PROBLEM	POSSIBLE CAUSES	CORRECTIONS
ENGINE WILL NOT START	Out of fuel.	Add fresh fuel.
	Wrong fuel.	Drain fuel tank and then add fresh fuel.
	Low engine oil.	Fill up with oil.
	Choke is OPEN if the engine is cold.	Close the choke.
	Low battery.	Charge the battery.
	Engine requires servicing.	Contact authorised Makinex dealer
ENGINE LACKS POWER	Stale fuel.	Drain fuel tank and then add fresh fuel.
	Dirty air filter.	Replace or clean air filter.
	Generator is overloaded.	Reduce the load.
	Fault in alternator.	Contact authorised Makinex dealer
	Engine throttle is in “SLOW” position.	Slide the throttle to “FAST” position.
	Engine requires servicing.	Contact authorised Makinex dealer
ENGINE IS RUNNING BUT NO AC OUTPUT	Circuit breaker tripped	Unplug all appliance from receptacles and reset the circuit breaker.
	Faulty appliance.	Connect with another appliance that is in good condition.
	Fault in generator	Contact authorised Makinex dealer
UNIDENTIFIED	Contact authorised Makinex dealer for assistance.	

For other engine problems or further instructions, refer to the provided Honda GX690 user manual.

ENGINE FREQUENCY ADJUSTMENT

The following instructions is intended to act as a fix for generators experiencing long parallel times. As engines accumulate work hours, it is likely that their respective frequencies will deviate apart resulting in parallel box require longer periods to synchronize during parallelling. The aim is to adjust the frequency of the engines to match the Hz of each other for performance and functionality. The frequency should be within 60 Hz ±5%.

NOTE: BELOW STEPS ARE FOR SERVICE TECHNICIANS ONLY

1. Ignite the one engine and observe the frequencies.

2. Locate the frequency governor adjustment screw in between the engine and exhaust as shown below.

3. Using a Phillips screwdriver, adjust the governor adjustment screw accordingly to bring the frequency of the engines as close as possible to 60Hz±5%. Use the display as a guide, once completed, turn off and repeat for engine 2.

4. Turn off both engines.

5. Once completed, start both engines and put the unit into parallel mode using the paralleling switch located below. Measure how long it took for the green light to light up to signal parallel mode in action.

6. If unit takes too long to sync into parallel mode, repeat step 1 to 5 to ensure the engines are as close to each other as practical, 60 Hz ±5%.

STORAGE WITH FUEL IN TANK

Gasoline fuel can become stale when stored over **30 days**. Stale fuel causes acid and gum deposits to form in the fuel system or crucial carburettor parts. To keep fuel fresh:

1. Add a fuel stabiliser liquid additive to fuel.
2. Run engine for a minimum of 2 minutes to allow it to circulate throughout the engine

WARNING	Fuel and fuel vapour are extremely flammable and explosive. Fire or explosion from misuse of fuel can cause severe burns and even death.	**FIRE HAZARD**

RUST PREVENTION IN CYLINDERS

1. Remove spark plugs and pour approx. 15ml (1/2oz) of clean engine oil into the cylinder.
2. Install spark plug and briefly turn the key starter for 1-2 seconds to distribute oil. **DO NOT** start engine at this time.

WARNING	Unintentional sparking can cause fire or electrical shock. Failure to observe this warning can cause severe property damage, severe burns and even death. Disconnect spark plug wire from spark plug and cover tip of spark plug wire with insulating tape and place wire where it cannot come in contact with spark plug or generator frame.

WARNING	Certain storage covers can be flammable or can melt in high temperatures. DO NOT place storage cover over generator until it has completely cooled.

BATTERY STORAGE PRECAUTIONS

After use of the generator, follow these precautions to ensure the battery does not drain whilst in storage or not in use.

1. Check the key ignition is in the OFF position.
2. Check the battery isolator is in the OFF position by turning anticlockwise to release.

LIMITED WARRANTY

To take advantage of the MAKINEX limited warranty, you must have maintenance performed by an authorised MAKINEX dealer or MAKINEX service technician. You are free to have your MAKINEX product serviced by any suitably qualified persons and this will not affect your statutory warranties, however, failure by the owner to have the recommended servicing carried out by an authorised MAKINEX dealer/service technician means that you cannot take advantage of the MAKINEX limited warranty.

MAKINEX warrants each new generator to be free from defects in material and workmanship under normal domestic and industrial use and service for 12 months from the date of original purchase, conditional to the limitations and exclusions printed on this page. This warranty applies only to new MAKINEX generator distributed by us and by our authorised MAKINEX dealers.

Under the limited warranty and at MAKINEX's discretion, upon evaluation, inspection and testing by a MAKINEX dealer or a MAKINEX service technician, MAKINEX will repair or replace defective part(s).

WARRANTY EXCLUSIONS

This warranty does not cover the following repairs and equipment:

NORMAL WEAR

Pressure cleaners need periodic parts and service to perform well. This warranty does not cover repair when normal use has exhausted the life of a part or the equipment.

INSTALLATION, USE, AND MAINTENANCE

This warranty will not apply to parts and/or labor if this generator is deemed to have been misused, neglected, involved in an accident, abused, loaded beyond the generator's limits, modified, installed improperly or connected incorrectly to any water supply. Normal maintenance such as spark plugs, air filters, adjustments, fuel system cleaning and obstruction due to build-up is not covered by this warranty.

OTHER EXCLUSIONS

This warranty excludes:

- Cosmetic defects such as paint, decals, etc.
- Wear items such as filter elements, Pistons, O-rings, etc.
- Accessory parts such as starting batteries, and storage covers.
- Failures due to acts of God and other force majeure events beyond the manufacturer's control.
- Problems cause by parts that are not original MAKINEX parts.
- Maintenance service cost
- Freight costs

OWNER'S RESPONSIBILITY UNDER THIS LIMITED WARRANTY

Strict adherence to the maintenance checks and schedule with proof of scheduled maintenance service required by an authorised agent or qualified mechanic. It is the consumer's responsibility to deliver the machine in question to our service premises or to the premises of our appointed agent at the consumer's expense for repair as applicable. Maintenance services are not covered under warranty.

CLAIM PROCEDURE:

- Contact MAKINEX by phone or email informing us of your machines problem or defect.
- Once the extent of the claim has been assessed, we retain the right to compensate the consumer for such defect, or repair (parts & labour), or replace the machine under warranty.
- All warranties will be carried out by MAKINEX authorised staff or appointed agents at a premise to be determined by the Manufacturer.
- Where the specific warranty component (e.g., engine, alternator) is under a Manufacturer's warranty other than MAKINEX (e.g., Honda, RFL etc), the consumer can either contact MAKINEX or the applicable Manufacturer for repairs where such warranty was registered with that manufacturer at purchase.
- Warranty calls will only be carried out by our representatives and not via client's choice of repairer. We will not accept back charges for any work not carried out by our representatives or accept any charges due to equipment being un-operational for any reason even during its warranty period.

CONTACT INFORMATION

For sales, service, warranty and parts for all MAKINEX products; please refer below.

	SALES, SERVICE, SPARE PARTS & WARRANTY
AUSTRALIA	**SALES** **TEL** 1300 795 953 or +61 2 9460 8071 **WEB** www.makinex.com.au **SERVICE, SPARE PARTS & WARRANTY** **EMAIL** service@makinex.com.au
USA	**SALES** **TEL** +1 855-625-4639 **WEB** www.makinex.com **SERVICE, SPARE PARTS & WARRANTY** **EMAIL** service@makinex.com

Or your nearest MAKINEX distributor

We have very knowledgeable, experienced staff to assist you with help and advice.

PRODUCT RISK / HAZARD ASSESSMENT TABLE

PRODUCT NAME:	GEN-32P	**Assessment Carried Out By:**	MATTHEW CAPE (MAKINEX PTY LTD)
MANUFACTURER:	MAKINEX	**Document Revision Number:**	001
OPERATOR COMPETENCY:	PLANT LICENCE NOT REQUIRED	**Date Created:**	29-October-2020

NOTES:

> THIS PRODUCT HAS BEEN DESIGNED AND MANUFACTURED AS A HYBRID POWER SYSTEM ONLY

> THIS DOCUMENT HAS BEEN PREPARED ACCORDING TO GUIDELINES AND RECOMMENDATIONS FOUND IN:
1. 'HAZPAK' PRODUCED BY THE WORK-COVER AUTHORITY AND
2. THE AUSTRALIAN STANDARDS 4024.1.4/5 - 1996 "SAFEGUARDING OF MACHINERY - PART 1: GENERAL PRINCIPLES"

> "**LIKELIHOOD LEVEL**" REFERS TO THE PROBABILITY OF AN EVENT HAPPENING. THE FOLLOWING SCALE HAS BEEN USED TO DESCRIBE THE LIKELIHOOD OF A DEFINED RISK / HAZARD EVENT OCCURING DURING NORMAL OPERATION OF THE EQUIPMENT. NOTE THAT LIKLIHOOD EVALUATION IS QUALITATIVE AND BASED ON BEST ESTIMATION VIA CONSULTATION AND EXPERIENCE:
1. **VERY LIKELY**
2. **LIKELY**
3. **UNLIKELY**
4. **VERY UNLIKELY**

> "**INJURY LEVEL**" REFERS TO THE SEVERITY OF INJURY CAUSED DUE TO AN EVENT OCCURING, USING THE FOLLOWING SCALE AS DEFINED BY THE "HAZPAK" DOCUMENT:
1. **FATALITY** = INJURIES RESULT IN DEATH
2. **MAJOR** = NORMALLY IRREVERSIBLE INJURIES
3. **MINOR** = REVERSIBLE INJURIES REQUIRING SEVERAL DAYS OFF
4. **NEGLIGIBLE** = ABLE TO BE TREATED USING FIRST AID

> "**RISK LEVEL**" REFERS TO THE SEVERITY OF A RISK BASED ON THE "LIKELIHOOD LEVEL" AND "INJURY LEVEL".INHERENTLY, AS THE CONSEQUENCE INCREASES IN SEVERITY, RISK INCREASES - EVEN WHEN LIKELIHOOD IS LOW - THE FOLLOWING SCALE HAS BEEN USED
1. **HIGH** = Potential Death, Permanent Disability, or Major Structural Damage.
2. **MEDIUM** = Potential Temporary, Disability, or Minor Structural Damage.
3. **LOW** = Potential incident that has the potential to cause persons to require first aid.

No:	TYPE / NATURE OF RISK or HAZARD			LIKELIHOOD LEVEL		INJURY LEVEL		RISK LEVEL		RISK / HAZARD CONTROL ACTION
1.0	MECHANICAL	1.1	CRUSH IF LOAD FALLS DURING TRANSPORTATION	3	UNLIKELY	1	MAJOR	2	HIGH	i. TRAINING AND QUALIFICATIONS FOR SAFE TRANSPORTATION (i.e. FORKLIFT LICENSE) ii. ENSURE LOAD IS PROPERLY SECURED iii. SET UP EXCLUSION ZONE WHEN LOADING AND UNLOADING
		1.2	CRUSH IF UNIT TIPS OVER	4	VERY UNLIKELY	2	MINOR	4	MEDIUM	i. ENSURE UNIT IS PLACED ON EVEN, LEVEL SURFACE
2.0	ELECTRICAL	2.1	ELECTROCUTION DUE TO EXPOSED/DAMAGED WIRING	4	VERY UNLIKELY	1	FATALITY	3	MEDIUM	i. FREQUENT INSPECTION OF WIRING AND CONNECTIONS ii. MAKE SURE CONNECTIONS ARE COVERED AND WIRING IS MANAGED AWAY FROM COMMON OPERATION AREAS
3.0	NOISE	3.1	DAMAGE TO HEARING DUE TO LONG TERM USE	4	VERY UNLIKELY	2	MAJOR	4	MEDIUM	i. POSITION STATION AWAY FROM WORKERS ii. ALWAYS WEAR PROPER SAFETY EQUIPMENT: EARPLUGS/EARMUFFS
4.0	CHEMICALS	4.1	IRRITATION DUE TO CONTACT WITH DIESEL WHEN REFUELING	1	VERY LIKELY	4	NEGLIGIBLE	3	MEDIUM	i. WARNING INSTRUCTIONS IN OPERATION MANUAL ii. INSTRUCTIONS IN OPERATION MANUAL TO SEEK APPROPRIATE FIRST AID
		4.2	IRRATATION DUE TO INHALATION OF DIESEL FUMES WHEN REFUELING	1	VERY LIKELY	3	MINOR	2	HIGH	i. WARNING INSTRUCTIONS IN OPERATION MANUAL ii. INSTRUCTIONS IN OPERATION MANUAL TO SEEK APPROPRIATE FIRST AID iii. REFUEL IN A WELL VENTILATED AREA
5.0	BURNS/FIRE	5.1	FIRE/EXPLOSION WHEN REFUELING GENERATOR	3	UNLIKELY	2	MAJOR	3	MEDIUM	i. WARNING STICKER ON FUEL TANK/GENERATOR: SHUT OFF MACHINE AND ALLOW TO COOL BEFORE REFUELING. NEVER REFUELD WHILE MACHINE IS RUNNING. ii. WARNING INSTRUCTIONS IN OEPRATION MANUAL iii. DO NOT SMOKE AND KEEP POTENTIAL INFLAMMATION SOURCES AWAY FROM ENGINE
		5.2	BURNS WHILST DOING OPERATING OR PERFORMING MAINTENANCE ON MACHINE	2	LIKELY	4	NEGLIGIBLE	4	MEDIUM	i. WARNING INSTRUCTIONS IN OPERATION MANUAL: BE CAUTIOUS OF HOT PARTS ii. ALLOW MACHINE TO COOL BEFORE OPERATING ON MACHINE